MB *25 & 35 Series Ball Bearing*

Special features minimize the three most common causes of premature bearing failure… loosening of bearings on rotating shafts, entrance of contaminants or loss of lubricant due to seal failure and insufficient housing strength.

Mounted Ball Bearings Designed for Long Life and Precision Performance

MB bearings provide design and performance features developed by decades of experience in supplying precision ball bearing inserts for other major mounted bearing manufacturers and complete mounted units to machinery and equipment manufacturers. They are priced competitively to bearings of comparable construction. In addition to sound basic design and construction, special features minimize the three most common causes of premature bearing failure… loosening of bearings on rotating shafts, entrance of contaminants or loss of lubricant due to seal failure and insufficient housing strength. Standard duty and medium duty foot-mounted pillow blocks, flange units, take-up blocks and hanger bearings cataloged in the following pages are available from stock.For other sizes, mountings or special requirements to fit your applications, please consult the Rexnord Bearing Products.

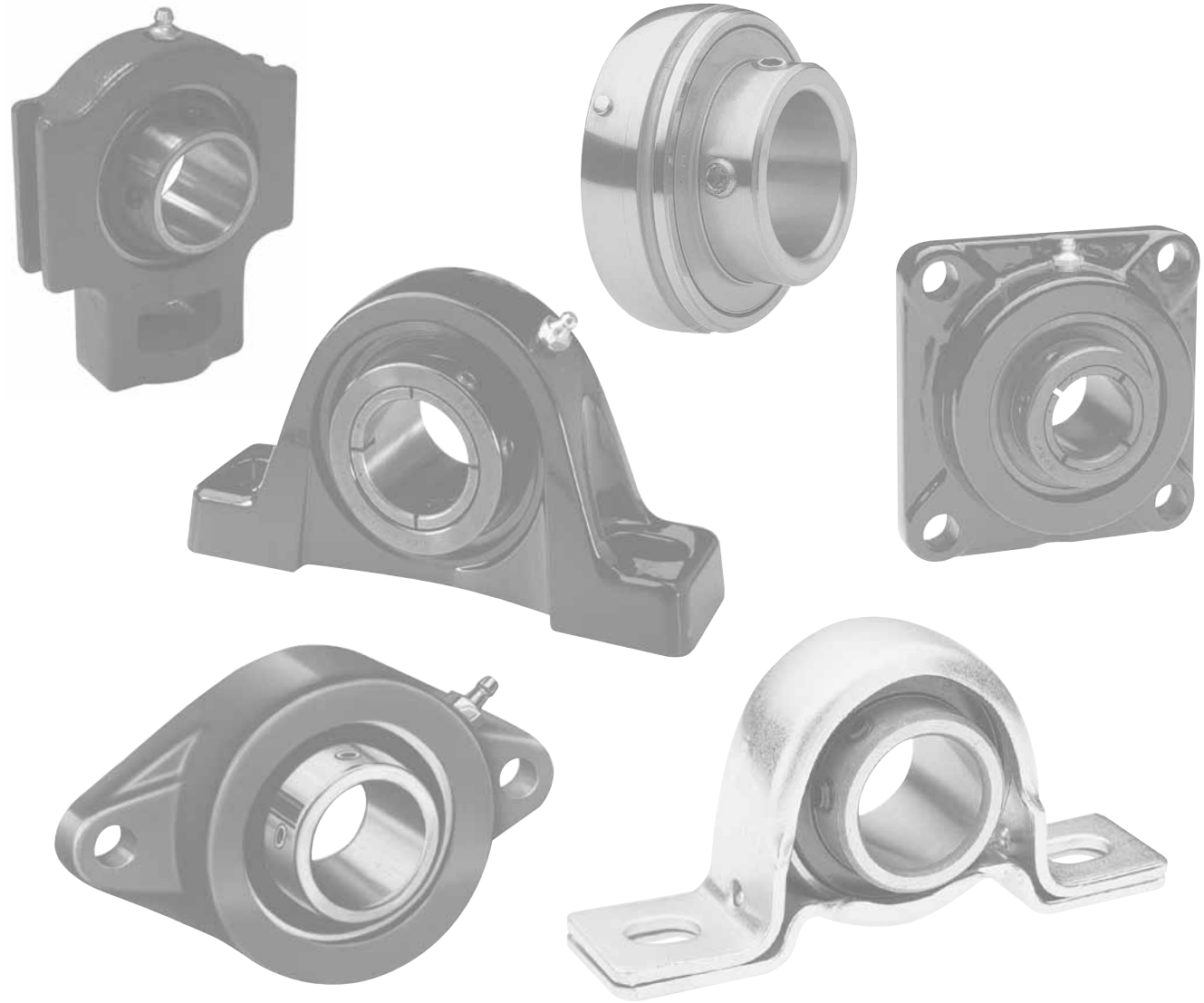

Concentric setscrew shaft locking device

The MB method of fastening the bearing inner race to the shaft provides substantial improvement in holding power compared to eccentric locking collars and even greater improvement over 120° set screw positioning, over-collars and other types of locking arrangement.

Combination seal-flinger system

Optimum protection from loss of lubricant and entrance of dirt and contaminants is achieved with positive lip-type contact seals. The resulting longer seal life extends bearing life significantly.

Rugged, one-piece cast iron housing

Housings are designed to withstand bearing load ratings, external vibration and shock. Foot mounted pillow block bolt holes are elongated for easy installation and adjustment.

Spherically-seated bearing insert with anti-rotation device

The spherical fit between the outer race O.D. and I.D. of the block is precisely controlled for easy shaft alignment. The anti-rotation device is permanently installed in the bearing insert O.D. It engages one of the housing insertion slots, preventing outer race creep and wear of housing. There is no danger of losing a separable pin during field replacement of bearings and no danger of preloading the bearing as is possible in other designs where a lube fitting is tightened against a locking pin.

Precision Mounted Ball Bearings with shafting locking device

MB concentric setscrew precision mounted ball bearings feature a concentric setscrew shaft locking device, resulting in a great improvement in the holding power (locking efficiency). Field experience shows substantial improvement in holding power when compared to eccentric locking collars and even greater improvement in locking efficiency when compared to 120° set screw positioning and other types of locking arrangements. The locking set screws are located at a 90° angular relationship, rather than the traditional 120°.

Standard sealing arrangements

Standard steel clad Type N single lip seals have a useful temperature range of –40°F to +225°F and can withstand temperatures of 250°F for intermittent service. Special sealing arrangements are available for higher temperatures and "free-running"or special contamination resistance.

Special optional sealing arrangements

Suffix-MHFF indicates flingers both sides. This provides a sealed, "free-running" bearing with heat shield protection. It is satisfactory for temperatures from –40°F to +225°F. Rexnord Bearing Products must be consulted regarding availability of any of these optional sealing configurations.

Examples for ordering:

1.Bearing Insert MB251–716–MHFFPA

2.Mounted Unit C251–716–MHFF

High temperature ball bearing inserts and housed units

Mounted ball bearings and MB25, MB35 and ER series inserts are available for high temperature applications up to 400°F. The "E1" package provides the following features.

1. Extra Internal Diameters Clearance (DC) based on a 200°F temperature differential between inner and outer races, compensates for the inner race expanding at a faster rate than the outer race and will avoid preloading of the bearings.
2. Steel Retainer (Cage) – 2 piece riveted construction.
3. High Temperature Lubrication – prelubricated with a No.2 consistency bentone-base grease with petroleum oil. When operated near upper limit, (400°F to 450°F) daily relubrication is required.
4. Viton Seals withstand temperatures to 400°F.

Examples for ordering:

1.Bearing Insert MB251–716–E1PA

2.Mounted Unit C251–716–E1

Free running applications and applications above 400°F

Sealing options such as –FF (flingers only) for "free running" applications and/or temperatures over 400°F where contamination is not severe. The flinger acts as a labyrinth seal. High temperature bearings require a greater amount of diametral clearance (DC) and a higher temperature lubricant. Consult Rexnord Bearing Products for recommendations.

Examples for ordering:

1. Bearing Insert MB251–716–FFPA
2. Mounted Unit C251–716–FF

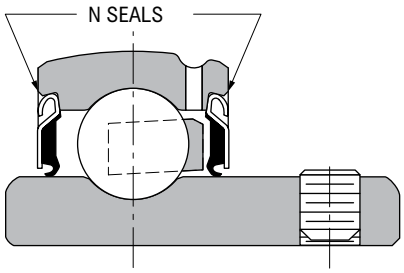

BASIC MB25/35 SEALS

214 thru 218 Basic Sizes have Nyla-K seals and Flingers

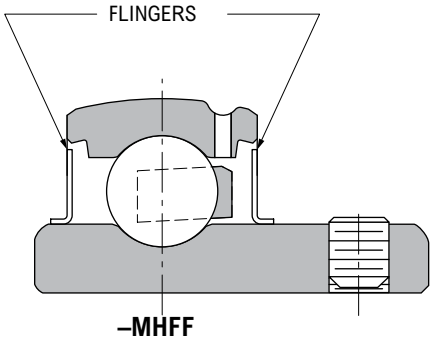

–MHFF

214 thru 218 Basic Sizes have Modified Nyla-K seals and Flingers use suffix MKFF

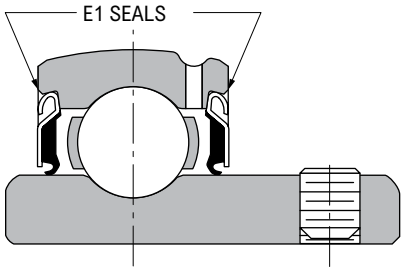

–E1

214 thru 218 Basic Sizes have Viton seals and Flingers use suffix TFF

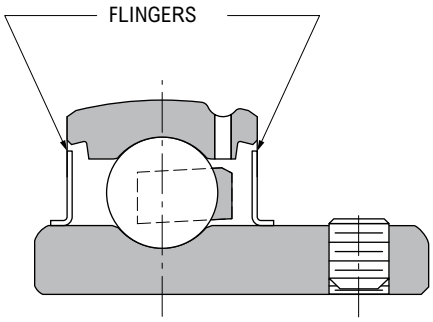

–FF

Nomenclature

N FC2 25 1 - 716 - FF JF PB

Symbol	Description
N	Nickel plated housing, penetrated rings, food grade grease
C	Pillow block, standard backing
CL	Pillow block, low backing
FC2	Flanged unit, 2 bolt
FC4	Flanged unit, 4 bolt
FPS2	Flanged unit, formed steel housing, 2 bolt
FPS3	Flanged unit, formed steel housing, 3 bolt round
FPSR2	Flanged unit, formed steel housing, 2 bolt w/ rubber bearing insert
MCHB	Hanger screw conveyor unit
MEHB	Hanger unit
MFB	Flanged bracket unit, 3 bolt
PFC4	Flanged cartridge unit, 4 bolt round
PS	Pillow block, formed steel housing
TBC	Pillow block, tapped base
TC	Take-up, wide slot
TFPS3	Flanged unit, formed steel housing, 3 bolt triangular housing
25K	Narrow inner ring, standard duty, Centrik-Lok collar
25	Narrow inner ring, standard duty, spring locking
35K	Narrow inner ring, medium duty, Centrik-Lok collar
35	Narrow inner ring, medium duty, spring locking
None	Shaft diameter less than 1 inch or a metric bore
1	Shaft diameter equal to or greater than 1 inch
-	Dash used as separator
716	Inch shaft fraction without the slash
35	Metric shaft diameter in millimeters
-	Dash used to separate suffix from bore designation
EDC	Bearing with steel retainer and increased clearance
STL	Bearing with steel retainer and standard clearance
None	Standard single lip seal
E1	Viton seals, increased clearance, steel retainer, high temp. lube
FF	Flingers only, 50% grease fill
HFF	Flingers only, 10% oil fill
MHFF	Flingers only 10% grease fill
XX	Non-standard grease designation
PB	Bearing with 100% grease fill
PD	Bearing with preservative only

Unmounted Nomenclature

MB 25 1 - 716 - FF JF PA

Symbol	Description
KMB	Ball bearing, spherical O.D. with lube groove and anti rotation pin
MB	Ball bearing, spherical O.D. with lube groove and anti rotation pin
ER	Adapter series, cylindrical O.D. with lube groove and O.D. locating ring
MSL	Ball bearing, cylindrical O.D., wide inner ring, spring locking
MSLN	Ball bearing, cylindrical O.D., narrow inner ring, spring locking
RER	Rubber cartridge unit (used in FPSR2 units)
25	Narrow inner ring, standard duty, spring locking - KMB & MB series only
35	Narrow inner ring, medium duty, spring locking - KMB & MB series only
None	Shaft diameter less than 1 inch or a metric bore
1	Shaft diameter equal to or greater than 1 inch
12	Shaft diameter in sixteenths of an inch - ER, RER, MSL, MSLN series only
204	Shaft diameter in one fifth of a millimeter - ER, RER, MSL, MSLN series only
None	Setscrew locking – ER series only
K	Centrik-Lok collar – ER series only
-	Dash used as separator
716	Inch shaft fraction without the slash – KMB & MB series only
35	Metric shaft diameter in millimeters – KMB & MB series only
-	Dash used to separate suffix from bore designation
EDC	Bearing with steel retainer and increased clearance
STL	Bearing with steel retainer and standard clearance
None	Standard single lip seal
E1	Viton seals, increased clearance, steel retainer, high temp. lube
FF	Flingers only, 50% grease fill
HFF	Flingers only, 10% oil fill
MHFF	Flingers only 10% grease fill
WO	External locating ring omitted – ER series only
XX	Non-standard grease designation
PA	Suffix designation for unmounted replacement bearing insert

MB 25 and 35 Series Ball Bearings

To select a bearing, determine the applied radial load, the applied thrust load, the desired Rating Life, and applicable operating conditions. The procedure shown here will aid in selecting a bearing to meet an L10 design life. The formulas for calculating life expectancy should be used to determine the Rating Life L10 for the bearing selected.

The selection procedures and rating formulas shown here are in agreement with The American Bearing Manufacturers Association Standards and ANSI/ABMA Standards STD 9-1990. Ratings are based on fatigue life. The Rating Life or fatigue life at 90% reliability is the usual basis for bearing selection.

Series 25 and 35 bearings have extended inner rings on one side only for compactness and low cost. These series are applicable to light or moderate duty requirements.

Where non-relubricatable bearings are used, bearing life is often limited by grease life, which is in turn affected by operating conditions. Also, economically designed housings must be applied within proportionate load limits. To assure a satisfactory bearing application, fitting practice, mounting, lubrication, sealing, static rating, housing strength, operating conditions and maintenance must be considered.

Selection

Step 1

Determine an appropriate L_{10} design life.

Type of service	Operating time, hours per year	Design life, years	L_{10} design life, hours
Light seasonal usage	500 to 750	3-5	3,000
Heavy seasonal usage	1,400 to 1,600	4-6	8,000
Industrial—8 hour shift	2,000	10	20,000

Step 2

Determine a required $\left(\frac{C}{P}\right)$ from Table 1.

Step 3

Calculate the required C and select a ball bearing.

a For radial load only:

$P = F_r$

required $C = \left(\frac{C}{P}\right) P$ using $\left(\frac{C}{P}\right)$ from Step 2

Select a ball bearing from Table 3 with a basic load rating C equal to or greater than the required C.

b For combined radial and thrust loads when $\frac{F_a}{F_r}$ is 0.19 or less:

$P = F_r$

required $C = \left(\frac{C}{P}\right) P$ using $\left(\frac{C}{P}\right)$ from Step 2

Select a ball bearing from Table 3 with a basic load rating C equal to or greater than the required C.

Step 3 (continued)

c For combined radial and thrust loads when $\frac{F_a}{F_r}$ is greater than 0.19, use the following trial method:

Maximum $P = .56F_r + 2.30F_a$

Maximum required $C = \left(\frac{C}{P}\right) P$ using from Step 2

Select a trial ball bearing with a basic load rating C from Table 3 approximately equal to the maximum required C.

With this trial bearing calculate: $\frac{F_a}{Nd^2}$

Determine X and Y from Table 2.

Calculate P for the trial bearing.

$P = XF_r + YF_a$

required $C = \left(\frac{C}{P}\right) P$ for the trial bearing using $\left(\frac{C}{P}\right)$ from Step 2

Consult Table 3, basic load rating. If a smaller bearing meets or nearly meets the required C, its life expectancy can be calculated.

Note: If the load P is greater than .15C for series 25 and 35 consult Rexnord Bearing Products.

Symbols for formulas:

C = basic load rating, pounds (or newtons)
Co = static load rating, pounds (or newtons)
e = a reference value
Fa = thrust load, pounds (or newtons)
Fr = radial load, pounds (or newtons)
L10 = rating life, hours
n = speed, revolutions per minute
P = equivalent radial load, pounds (or newtons)
X = radial factor
Y = thrust factor

Basic formula

$$\left(\frac{C}{P}\right) = \left(\frac{L_{10} \times n \times 60}{1{,}000{,}000}\right)^{1/3}$$

$$L_{10} = \frac{\left(\frac{C}{P}\right)^3 \times 1{,}000{,}000}{n \times 60}$$

Table 1 • Relation of L10 life and speed to $\left(\frac{C}{P}\right)$

Bearing life, hours L_{10}	$\left(\frac{C}{P}\right)$ ratio								
	Speed, n								
	50	100	200	300	400	500	600	700	800
3000	2.08	2.62	3.30	3.77	4.15	4.47	4.75	5.01	5.23
4000	2.29	2.88	3.63	4.15	4.57	4.92	5.23	5.51	5.76
5000	2.46	3.10	3.91	4.47	4.92	5.30	5.64	5.93	6.20
6000	2.62	3.30	4.15	4.75	5.23	5.64	5.99	6.30	6.59
8000	2.88	3.63	4.57	5.23	5.76	6.20	6.59	6.94	7.25
10000	3.10	3.91	4.92	5.64	6.20	6.68	7.10	7.47	7.81
12000	3.30	4.15	5.23	5.99	6.59	7.10	7.54	7.94	8.30
14000	3.47	4.37	5.51	6.30	6.94	7.47	7.94	8.36	8.74
16000	3.63	4.57	5.76	6.59	7.25	7.81	8.30	8.74	9.14
18000	3.77	4.75	5.99	6.86	7.54	8.13	8.63	9.09	9.50
20000	3.91	4.92	6.20	7.10	7.81	8.42	8.94	9.41	9.84
25000	4.21	5.30	6.68	7.65	8.42	9.07	9.63	10.10	10.60
30000	4.47	5.64	7.10	8.13	8.94	9.63	10.20	10.80	11.30
35000	4.71	5.93	7.47	8.55	9.41	10.10	10.80	11.30	11.90
40000	4.92	6.20	7.81	8.94	9.84	10.60	11.30	11.90	12.40
45000	5.12	6.45	8.13	9.30	10.2 0	11.00	11.70	12.30	12.90
50000	5.30	6.68	8.42	9.63	10.60	11.40	12.10	12.80	13.40
60000	5.64	7.10	8.94	10.20	11.30	12.10	12.90	13.60	14.20
70000	5.93	7.47	9.41	10.80	11.90	12.80	13.6 0	14.30	14.90
80000	6.20	7.81	9.84	11.30	12.40	13.40	14.20	14.90	15.60
90000	6.45	8.13	10.20	11.70	12.90	13.90	14.80	15.50	16.20
100000	6.68	8.42	10.60	12.10	13.40	14.40	15.30	16.10	16.80
150000	7.65	9.63	12.10	13.90	15.30	16.50	17.50	18.40	19.30
200000	8.42	10.60	13.40	15.30	16.80	18.10	19.30	20.30	21.20
	Speed, n								
	900	1000	1200	1500	1800	2400	3600	6000	10000
3000	5.44	5.64	5.99	6.45	6.86	7.54	8.63	10.20	12.10
4000	5.99	6.20	6.59	7.10	7.54	8.30	9.50	11.30	13.40
5000	6.45	6.68	7.10	7.65	8.13	8.94	10.20	12.10	14.40
6000	6.86	7.10	7.54	8.13	8.63	9.50	10.90	12.90	15.30
8000	7.54	7.81	8.30	8.94	9.50	10.50	12.00	14.20	16.80
10000	8.13	8.42	8.94	9.63	10.20	11.30	12.90	15.30	18.10
12000	8.63	8.94	9.50	10.20	10.90	12.00	13.70	16.20	19.30
14000	9.09	9.41	10.0	10.80	11.40	12.60	14.40	17.10	20.30
16000	9.50	9.84	10.5	11.30	12.00	13.20	15.10	17.90	21.20
18000	9.88	10.20	10.90	11.70	12.40	13.70	15.70	18.60	22.00
20000	10.20	10.60	11.30	12.10	12.90	14.20	16.20	19.30	22.80
25000	11.00	11.40	12.10	13.10	13.90	15.30	17.50	20.70	24.60
30000	11.70	12.10	12.90	13.90	14.80	16.20	18.60	22.00	26.10
35000	12.30	12.80	13.60	14.60	15.50	17.10	19.60	23.20	27.50
40000	12.90	13.40	14.20	15.30	16.20	17.90	20.50	24.30	28.70
45000	13.40	13.90	14.80	15.90	16.90	18.60	21.30	25.20	29.90
50000	13.90	14.40	15.30	16.50	17.50	19.30	22.00	26.10	31.00
60000	14.80	15.30	16.20	17.50	18.60	20.50	23.40	27.80	32.90
70000	15.50	16.10	17.10	18.40	19.60	21.50	24.60	29.20	34.60
80000	16.20	16.80	17.90	19.30	20.50	22.50	25.80	30.50	36.20
90000	16.90	17.50	18.60	20.00	21.30	23.40	26.80	31.80	37.70
100000	17.50	18.10	19.30	20.70	22.00	24.30	27.80	32.90	39.00
150000	20.00	20.70	22.00	23.70	25.20	27.80	31.80	37.70	44.60
200000	22.00	22.80	24.30	26.10	27.80	30.50	35.00	41.40	49.10

Life Expectancy

To calculate the Rating Life L_{10} of any selected or trial bearing:

Step 1 Determine the equivalent radial load P.

a For radial load only:
$P = F_r$

b For combined radial and thrust load:
$P = XF_r + YF_a$ using X and Y from Table 2 below.

Step 2 Calculate the ratio of basic load rating C to the equivalent radial load.
$\left(\frac{C}{P}\right)$

Step 3 Approximate the bearing life from Table 1.

Table 2 • X and Y factors for ball bearings

$\frac{F_a}{Nd^2}$	e	$\frac{F_a}{F_r} \le e$		$\frac{F_a}{F_r} > e$	
		X	Y	X	Y
25	.19	1.0	0	.56	2.30
37.5	.21	1.0	0	.56	2.15
50	.22	1.0	0	.56	1.99
75	.24	1.0	0	.56	1.85
100	.26	1.0	0	.56	1.71
125	.27	1.0	0	.56	1.63
150	.28	1.0	0	.56	1.56
200	.30	1.0	0	.56	1.45
300	.34	1.0	0	.56	1.31
500	.38	1.0	0	.56	1.15
750	.42	1.0	0	.56	1.04
1000	.44	1.0	0	.56	1.00

For values between those in the table linear interpolation can be used.

Life Adjustment

The Rating Life, L_{10}, may be modified for some applications in accordance with the formula

$$L'_n = a_1 a_2 a_3 L_{10}$$

where L'_n = Adjusted life for (100-n) % reliability,

a_1 = Life adjustment factor for reliability

a_2 = Life adjustment factor for material and processing

a_3 = Life adjustment factor for operating conditions.

For most normal applications, all factors will be taken as 1, and the Rating Life used as the selection basis or life estimate. In addition, as long as standard catalog bearings are used, a_2 will be normally set equal to one. The factor a_3 covers such things as lubrication, misalignment, and temperature. Some conditions that could yield a_3 significantly different than unity include speeds less than 20000 DN or greater than 200000 DN, temperatures below –40°F (–40°C) or above 275°F (135°C). For other possible conditions, as well as additional information on life adjustment factors, consult Rexnord Bearing Products.

Table 3 - Load Ratings

Basic size	Co Static load rating		C Basic load rating		Approximate speed limit RPM*			d Ball diameter	N Number of balls	Nd^2
	Newtons	pounds	*Newtons*	pounds	N seals	E,E1 seals	Flingers only	inches		
203	*4940*	1110	*8100*	1820	14000	9000	15800	19/64	7	0.617
204	*6590*	1480	*9830*	2210	10000	7500	13400	5/16	8	0.781
205	*7830*	1760	*10810*	2430	9600	6800	11400	5/16	9	0.879
206	*11300*	2530	*15030*	3380	8000	5600	9800	3/8	9	1.27
207	*15300*	3440	*19880*	4470	6850	4800	8400	7/16	9	1.72
208	*19900*	4460	*25100*	5640	6000	4500	7500	1/2	9	2.25
209	*20400*	4590	*25220*	5670	5330	4000	6800	1/2	9	2.25
210	*23200*	5220	*27090*	6090	4800	3600	6400	1/2	10	2.50
211	*29200*	6570	*33540*	7540	4360	3200	5800	9/16	10	3.16
212	*36000*	8080	*40520*	9110	4000	3000	5300	5/8	10	3.91
					K seals	TFF seals	Flingers only			
214	*38300*	8620	*48000*	10800	3050	2850	4600	11/16	10	4.73
215	*37600*	8460	*47600*	10700	2900	2700	4400	11/16	10	4.73
216	*50700*	11400	*59600*	13400	2700	2550	4050	3/4	11	6.19
218	*64000*	14400	*73800*	16600	2400	2250	3600	7/8	10	7.66

If the load is greater than .25C consult Rexnord Bearing Products.

* Approximate speed limits are based on grease lubrication and moderate load.

Table 4 - Load Ratings

Basic Bearing Size	L_{10} Minimum Life, Hours	Radial Load Ratings in Pounds at Various Revolutions Per Minute																				
		50	100	200	300	400	500	600	700	800	900	1000	1200	1500	1600	1800	2000	2500	3000	3500	4000	5000
203	8000	–	–	398	347	315	293	276	262	251	241	233	219	203	198	191	184	171	161	152	146	135
	20000	–	369	293	256	233	216	203	193	184	178	171	161	150	146	141	135	126	118	113	107	100
	40000	369	293	233	203	184	171	161	152	146	141	135	128	118	115	112	107	100	94	89	85	79
	100000	272	216	171	150	135	126	118	113	108	104	100	94	87	85	82	79	73	69	65	63	58
204	8000	–	–	483	422	383	356	335	318	304	293	282	266	247	241	232	224	208	195	185	178	164
	20000	–	449	356	311	282	262	247	234	224	216	208	195	182	178	171	164	153	144	137	130	121
	40000	449	356	282	247	224	208	195	185	178	171	164	155	144	140	136	130	121	114	108	104	96
	100000	330	262	208	182	164	153	144	137	131	126	122	114	106	104	100	96	89	84	80	76	71
205	8000	–	–	531	464	421	391	368	350	335	322	311	292	271	265	255	246	229	215	204	195	181
	20000	–	493	391	342	311	288	271	258	246	238	229	215	200	195	188	181	168	158	150	143	133
	40000	493	391	311	271	246	229	215	204	195	188	181	171	158	154	150	143	133	125	119	114	106
	100000	363	288	229	200	181	168	158	150	144	138	134	125	117	114	110	106	98	92	88	84	78
206	8000	–	–	739	646	586	545	512	487	466	448	432	407	378	368	355	342	318	299	284	272	252
	20000	–	686	545	476	432	401	378	359	343	331	318	299	279	272	262	252	234	220	209	200	185
	40000	686	545	432	378	343	318	299	284	272	262	252	238	220	215	208	200	185	175	166	159	147
	100000	505	401	318	279	252	234	220	209	201	193	186	175	163	159	153	147	136	129	122	117	108
207	8000	–	–	978	854	776	720	678	644	616	592	572	538	500	487	470	453	421	395	375	360	333
	20000	–	908	720	629	572	530	500	475	454	438	421	395	369	360	346	333	310	292	277	264	245
	40000	908	720	572	500	454	421	395	375	360	346	333	314	292	284	275	264	245	231	220	210	195
	100000	669	530	421	369	333	310	292	277	266	255	246	231	215	210	203	195	180	170	161	155	143
208	8000	–	–	1230	1070	979	909	855	812	777	748	722	679	630	615	593	572	532	499	473	454	420
	20000	–	1140	909	794	722	669	630	599	573	552	532	499	466	454	437	420	391	368	350	333	309
	40000	1140	909	722	630	573	532	499	473	454	437	420	397	368	359	348	333	309	292	277	266	246
	100000	844	669	532	466	420	391	368	350	335	322	311	292	272	266	256	246	228	215	204	195	181
209	8000	–	–	1240	1080	984	914	860	817	782	751	725	683	634	618	596	575	534	501	476	457	423
	20000	–	1150	914	798	725	673	634	602	576	555	534	501	468	457	439	423	393	370	352	335	311
	40000	1150	914	725	634	576	534	501	476	457	439	423	399	370	361	350	335	311	293	279	267	247
	100000	848	673	534	468	423	393	370	352	337	324	313	293	273	267	257	247	229	216	205	196	182
210	8000	–	–	1330	1160	1050	982	924	877	840	807	779	733	681	664	641	617	574	538	511	491	
	20000	–	1230	982	857	779	723	681	647	618	597	574	538	503	491	472	454	422	398	378	360	
	40000	1230	982	779	681	618	574	538	511	491	472	454	428	398	387	375	360	334	315	300	287	
	100000	911	723	574	503	454	422	398	378	362	348	336	315	294	287	276	265	246	232	220	211	
211	8000	–	–	1640	1440	1300	1210	1140	1080	1040	1000	965	908	843	823	793	764	711	667	633	608	
	20000	–	1530	1210	1060	965	895	843	801	766	739	711	667	623	608	584	562	523	492	468	446	
	40000	1530	1210	965	843	766	711	667	633	608	584	562	530	492	480	465	446	414	390	371	355	
	100000	1120	895	711	623	562	523	492	468	448	430	416	390	364	355	342	329	305	287	273	261	
212	8000	–	–	1990	1740	1580	1460	1380	1310	1250	1200	1160	1090	1010	994	958	923	859	806	765	734	
	20000	–	1850	1460	1280	1160	1080	1010	968	925	893	859	806	752	734	706	679	632	595	565	539	
	40000	1850	1460	1160	1010	925	859	806	765	734	706	679	641	595	580	562	539	500	472	448	429	
	100000	1360	1080	859	752	679	632	595	565	542	520	503	472	440	429	414	397	368	347	330	316	
214	8000	–	–	2360	2060	1870	1740	1630	1550	1480	1430	1380	1300	1200	1170	1130	1090	1010	955			
	20000	–	2190	1740	1520	1380	1280	1200	1140	1090	1050	1010	955	892	870	837	805	750	705			
	40000	2190	1740	1380	1200	1090	1010	955	907	870	837	805	760	705	687	666	639	593	559			
	100000	1610	1280	1010	892	805	750	705	670	642	617	596	559	521	509	490	471	437	412			
215	8000	–	–	2340	2040	1850	1720	1620	1540	1470	1410	1370	1280	1190	1160	1120	1080	1000				
	20000	–	2170	1720	1500	1370	1270	1190	1130	1080	1040	1000	946	884	862	829	798	743				
	40000	2170	1720	1370	1190	1080	1000	946	899	862	829	798	753	699	681	660	633	587				
	100000	1600	1270	1000	884	798	743	699	664	636	611	591	554	516	504	486	467	433				
216	8000	–	–	2930	2560	2320	2160	2030	1930	1840	1770	1710	1610	1490	1460	1410	1350	1260				
	20000	–	2720	2160	1880	1710	1590	1490	1420	1360	1310	1260	1180	1100	1080	1030	1000	930				
	40000	2720	2160	1710	1490	1360	1260	1180	1120	1080	1030	1000	943	875	853	827	792	736				
	100000	2000	1590	1260	1100	1000	930	875	832	797	765	740	694	647	632	609	585	542				
218	8000	–	–	3630	3170	2880	2670	2510	2390	2280	2200	2120	2000	1850	1810	1740	1680					
	20000	–	3370	2670	2330	2120	1970	1850	1760	1680	1620	1560	1460	1370	1330	1280	1230					
	40000	3370	2670	2120	1850	1680	1560	1460	1390	1330	1280	1230	1160	1080	1050	1020	982					
	100000	2480	1970	1560	1370	1230	1150	1080	1030	988	948	917	860	801	783	754	724					

See previous page for Basic Load Rating

Operation in the shaded areas require frequent relubrication.

If the load P is greater than .25C consult Rexnord Bearing Products.

ER, ER-K Series Housing Fits										
Size Code	Outside Diameter of Bearing		Rotating Housing				Stationary Housing			
			Diameter		Resultant Fit		Diameter		Resultant Fit	
	Min	Max	Min	Max	Loose	Tight	Min	Max	Loose	Tight
204	1.8499	1.8540	1.8498	1.8504	0.0005	0.0006	1.8503	1.8509	0.0010	0.0001
205	2.0466	2.0472	2.0466	2.0471	0.0005	0.0006	2.0471	2.0476	0.0010	0.0001
206	2.4403	2.4409	2.4403	2.4408	0.0005	0.0006	2.4408	2.4413	0.0010	0.0001
207	2.8340	2.8346	2.8340	2.8345	0.0005	0.0006	2.8345	2.8350	0.0010	0.0001
208	3.1490	3.1496	3.1490	3.1495	0.0005	0.0006	3.1495	3.1500	0.0010	0.0001
209	3.3457	3.3465	3.3458	3.3464	0.0007	0.0007	3.3464	3.3470	0.0013	0.0001
210	3.5425	3.5433	3.5426	3.5432	0.0007	0.0007	3.5432	3.5438	0.0013	0.0001
211	3.9362	3.9370	3.9363	3.9369	0.0007	0.0007	3.9369	3.9375	0.0013	0.0001
212	4.3299	4.3307	4.3300	4.3306	0.0007	0.0007	4.3306	4.3312	0.0013	0.0001
214	4.9203	4.9213	4.9204	4.9212	0.0009	0.0009	4.9211	4.9219	0.0016	0.0002
215	5.1171	5.1181	5.1172	5.1180	0.0009	0.0009	5.1179	5.1187	0.0016	0.0002
216	5.5108	5.5118	5.5109	5.5117	0.0009	0.0009	5.5116	5.5124	0.0016	0.0002